Using Siemens NX 11 Software

The Cap

From the 2D sketches below, construct the corresponding 3D piece using the *part design* module.

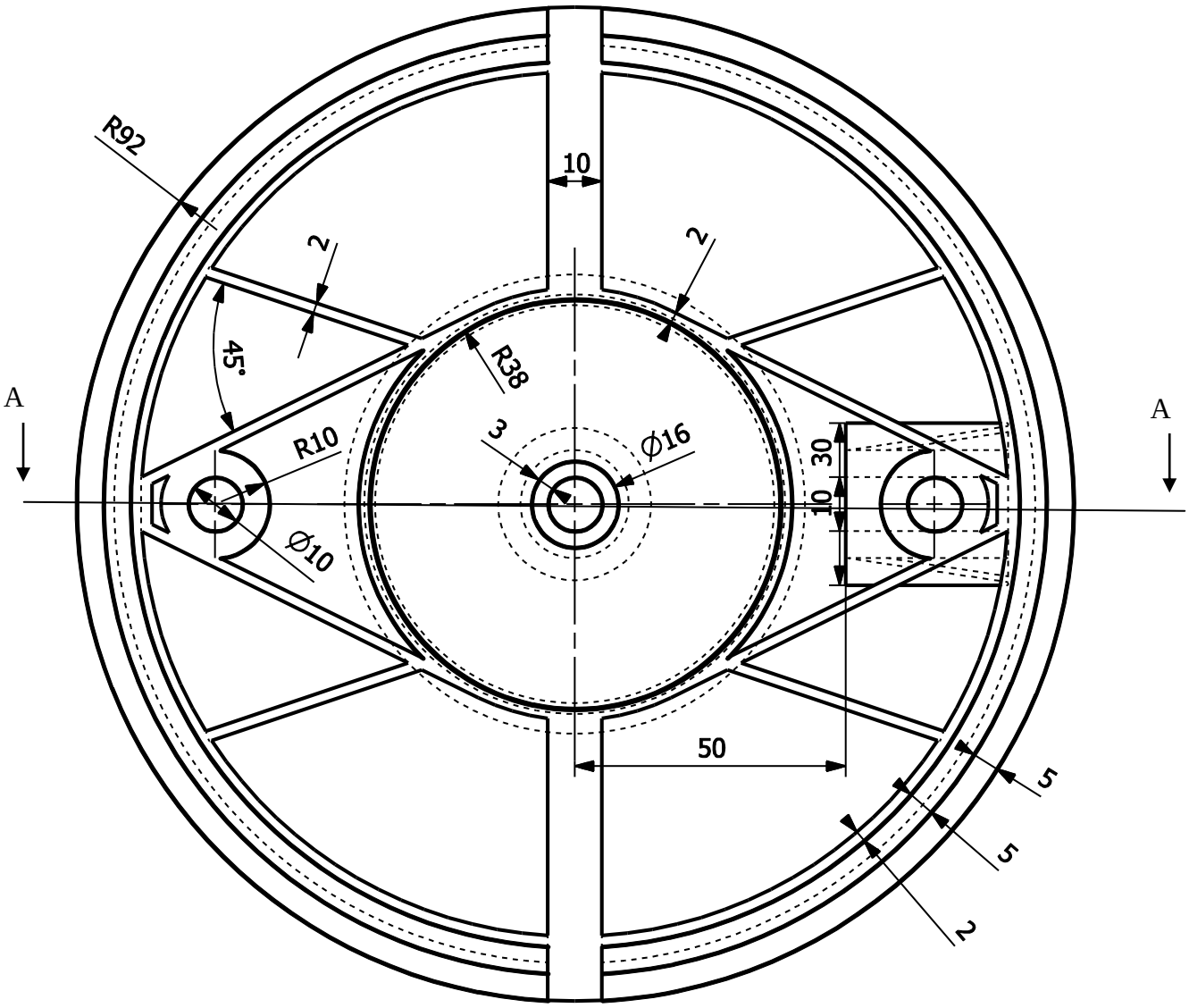

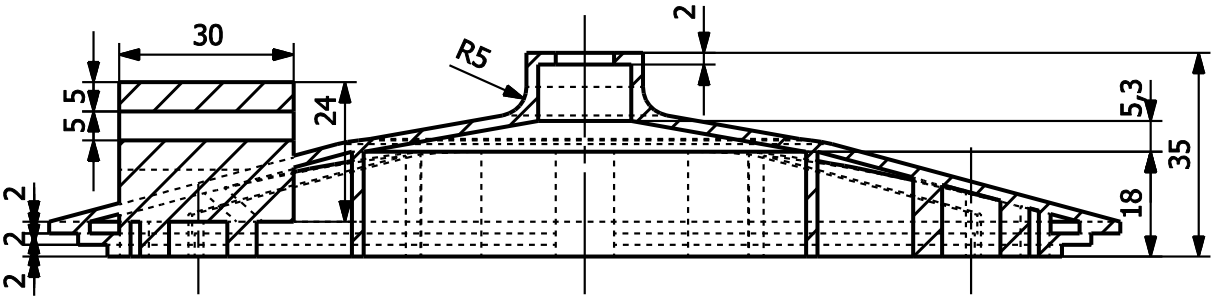

SECTION A-A